TOWN OF SUMMERVILLE
MAST ARMS

HIGHWAY 17A
INTERSECTIONS
BERKELEY COUNTY

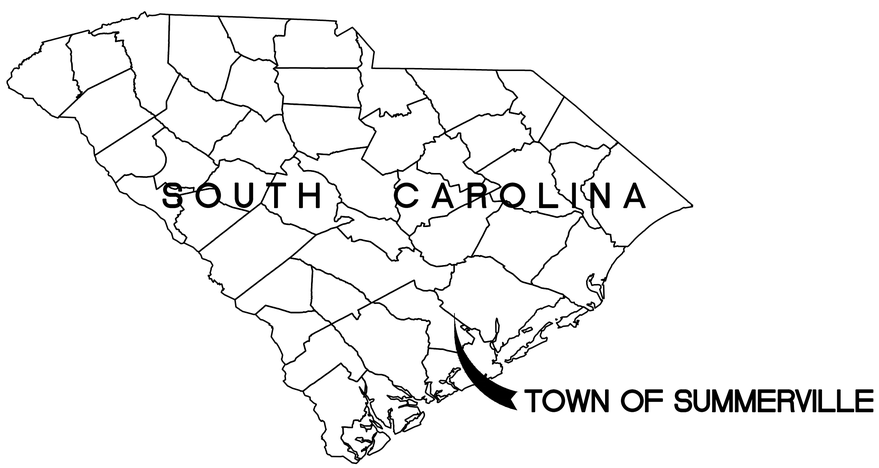

SOUTH CAROLINA PROFESSIONAL ENGINEER No. 24211 RUSSELL W. CORNETTE, JR.

THE TOWN OF SUMMERVILLE
TOWN HALL
200 SOUTH MAIN STREET
SUMMERVILLE, S.C. 29483
TELEPHONE (843) 851-4225
FAX (843) 832-8182

GENERAL CONSTRUCTION ABBREVIATIONS

#	NUMBER OR POUND	D	DIAMETER	O.D.	OUTSIDE DIAMETER	P.V.C.	POLYVINYLCHLORIDE
~	DIAMETER	DIA	DIAMETER	INFL	INFLUENT	R.C.P.	REINFORCED CONCRETE PIPE
&	AND	D.I.P.	DUCTILE IRON PIPE	INS.	INSIDE	RAD.	RADIUS
<	LESS THAN	DISCH.	DISCHARGE	INV.	INVERT	RAS	RETURN ACTIVATED SLUDGE
>=	LESS THAN OR EQUAL TO	DP	DEEP	JT.	JOINT	RED	REDUCER
>	GREATER THAN	DWLS.	DOWELS	JTS	JOINTS	REF	REFERENCE
@	AT	E.F.	EACH FACE	L.L.O.	LONG LEG OUT	REINF	REINFORCING OR REINFORCED
A.B.	ANCHOR BOLT	E.J.	EXPANSION JOINT	LB	POUND	REQ'D	REQUIRED
A.F.F.	ABOVE FINISHED FLOOR	EA	EACH	LG	LONG	S.S.	STAINLESS STEEL
ADDL	ADDITIONAL	EFF.	EFFLUENT	L.P.	LOW POINT	SCH.	SCHEDULE
ALUM	ALUMINUM OR ALUM	EL	ELEVATION	M.J.	MECHANICAL JOINT	SHT	SHEET
APPROX	APPROXIMATE(LY)	ELEV	ELEVATION	MATL.	MATERIAL	SIM	SIMILAR
ARCH	ARCHITECTURAL	EOP	EDGE OF PAVEMENT	MAS	MASONRY	SO2	SULFUR DIOXIDE
BM	BENCH MARK OR BEAM	EQ	EQUAL	MAX	MAXIMUM	SPA	SPACES
BOTT.	BOTTOM	EQUIP	EQUIPMENT	MECH	MECHANICAL	SQ.	SQUARE
B.W.	BLOCK WALL	EXIST.	EXISTING	MFR	MANUFACTURER	STD.	STANDARD
C.I.	CAST IRON	EXP.	EXPANSION	MH	MANHOLE	STL	STEEL
C/C	CENTER TO CENTER	F.E.S.	FLARED END SECTION	MIN	MINIMUM	STN	STAINLESS
CAP	CAPACITY	F.R.P.	FIBERGLASS REINFORCED PLASTIC	MNTG	MOUNTING	S.W.	SLAB WIDTH
CIRCUM	CIRCUMFERENCE			N.P.W.	NONPOTABLE WATER	S.W.D.	SIDE WALL DEPTH
CL	CLAY	FIG	FIGURE	N.T.S.	NOT TO SCALE	T/	TOP OF
CLR.	CLEARANCE	FIN	FINISHED	NO.	NUMBER	TCJ,CJ	TYP. CONTROL JOINT, CONSTRUCTION JOINT
<	CENTERLINE	FL.	FLANGE	O.C.	ON CENTER	THRD	THREAD(S)(ED)
CL2	CHLORINE	FLR	FLOOR	O/O	OUTSIDE TO OUTSIDE	TRICK	TRICKLING
CLARIF	CLARIFIER	FTG	FOOTING	OPNG	OPENING	TYP	TYPICAL
CHEM.	CHEMICAL	GALV	GALVANIZED	OX	OXIDATION	U.O.N.	UNLESS OTHERWISE NOTED
COL	COLUMN	HDWE	HARDWARE	P.E.	PLAIN END	VERT	VERTICAL
CONC.	CONCRETE	HK	HOOK	PED	PEDESTAL	W.W.F.	WELDED WIRE FABRIC
CONST	CONSTRUCTION	HORIZ.	HORIZONTAL	PL	PLATE	W/	WITH
CONT	CONTINUOUS	H.P.	HIGH POINT	PLCS.	PLACES	W/O	WITHOUT
CONTR	CONTRACTOR	HYD	HYDRANT	PROJ	PROJECTION	WAS	WASTE ACTIVATED SLUDGE
CU	COPPER	I.D.	INSIDE DIAMETER	P.S.	PUMP STATION	W/L	WATER LEVEL

SECTION/DETAIL LEGEND

DETAIL CALL-OUT AND DETAIL TITLE IDENTIFICATION SYMBOL

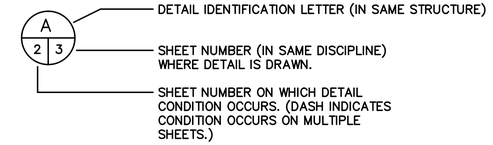

SECTION CUT SYMBOL (w/ARROW) OR TITLE IDENTIFICATION SYMBOL (w/o ARROW)

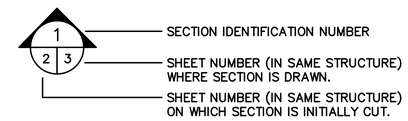

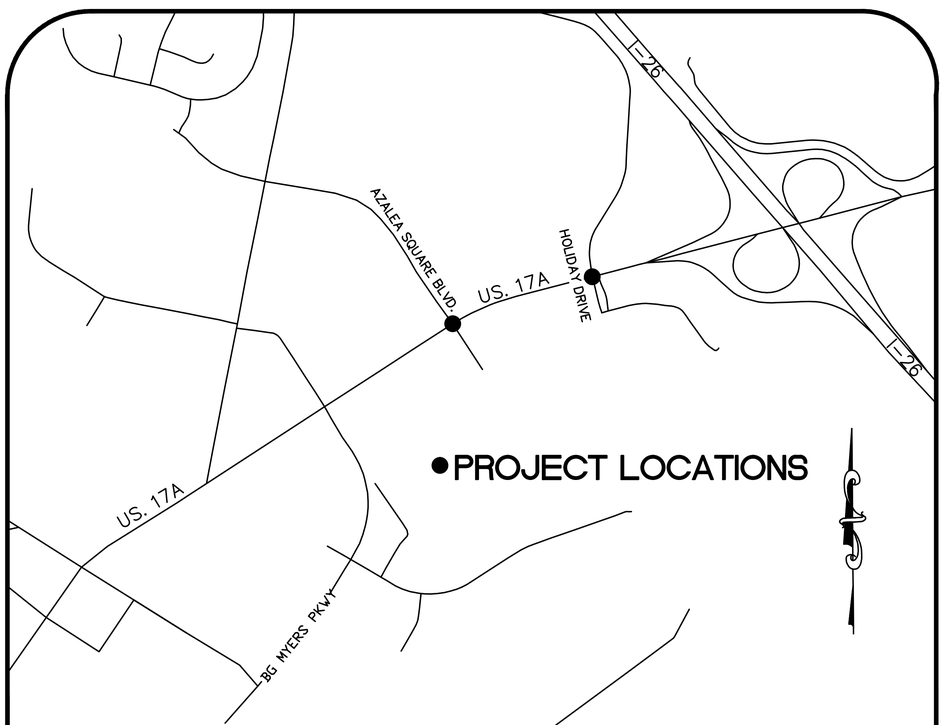

VICINITY MAP

INDEX OF SHEETS

G-1 COVER SHEET
G-2 VICINITY MAP AND INDEX
G-3 HIGHWAY 17A AND AZALEA SQ. BLVD. INTERSECTION
G-4 HIGHWAY 17A AND HOLIDAY DRIVE INTERSECTION
G-5 ELEVATIONS AND DETAILS
TS-1 HIGHWAY 17A AND AZALEA SQ. BLVD. INTERSECTION
REF-1 SCDOT SIGNAL PLAN: US 17 A AND PERKINS/SHOPPING CENTER
TS-2 HIGHWAY 17A AND HOLIDAY DRIVE INTERSECTION
REF-2 SCDOT SIGNAL PLAN: US 17 A AND HOLIDAY DRIVE (S-8-1259)/RACKAWAY DR. (O.S.)

VALMONT REFERENCE DRAWINGS

1 MAST ARM ASSEMBLY DETAILS 11965-1
2 MAST ARM ASSEMBLY DETAILS 11965-2

REVISIONS			
SYM.	DESCRIPTION	DATE	BY

SOUTH CAROLINA PROFESSIONAL ENGINEER LICENSED RUSSELL W. CONGDON III No. 24211

THE TOWN OF SUMMERVILLE
TOWN HALL
200 SOUTH MAIN STREET
SUMMERVILLE, S.C. 29483
TELEPHONE (843) 851-4225
FAX (843) 832-8182

INDEX AND VICINITY MAP

TOWN OF SUMMERVILLE
MAST ARMS
SUMMERVILLE, SOUTH CAROLINA

DATE:	AUGUST,2014
DESIGNED:	PBW
DRAWN:	KAS
CHECKED:	PBW
SCALE:	AS SHOWN
SHEET NO.	G-2
OF:	-

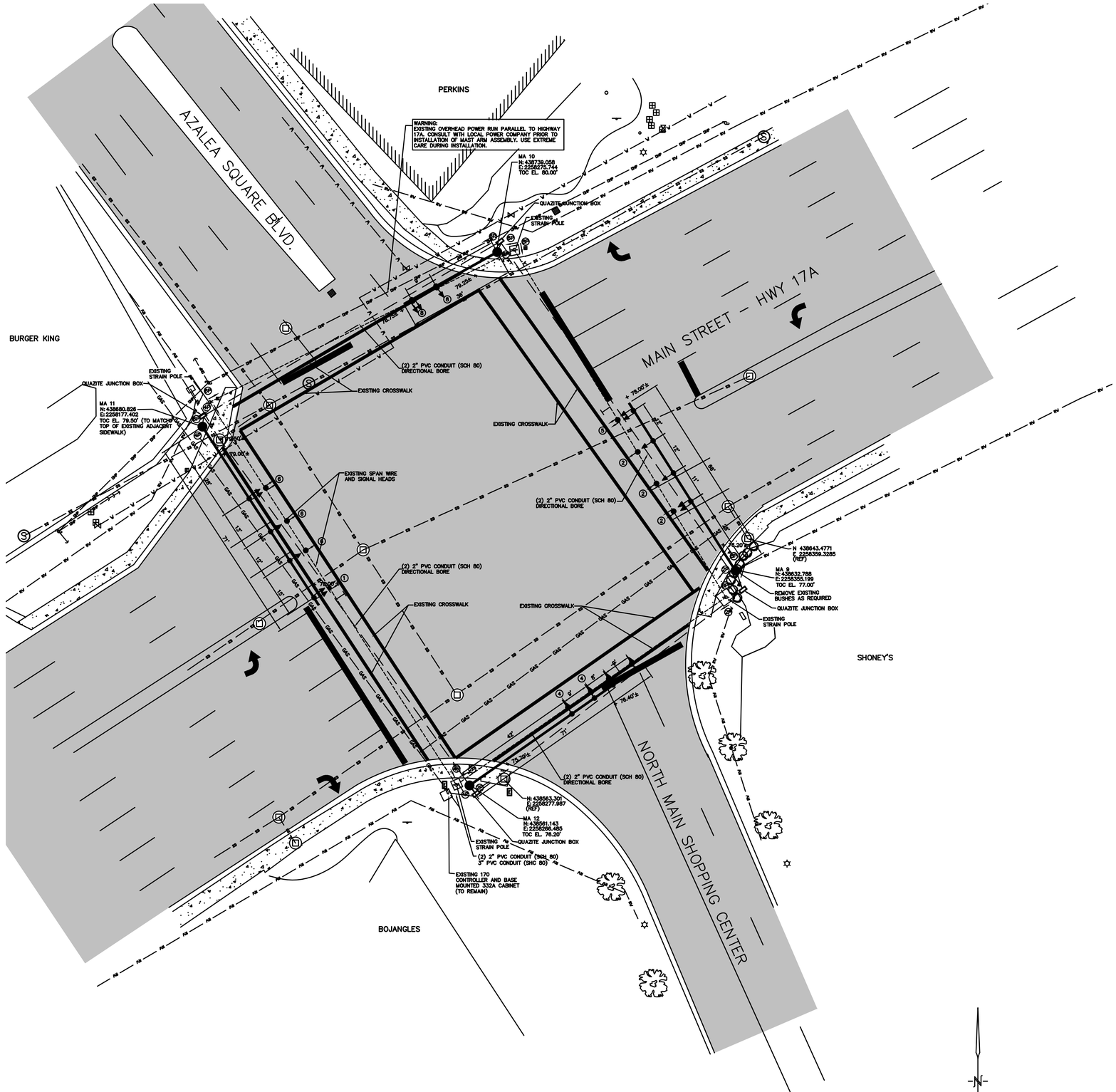

INTERSECTION MAST ARM LAYOUT PLAN

SCALE: 1" = 20'

N

REVISIONS			
SYM.	DESCRIPTION	DATE	BY

A. GENERAL

1. PROJECT DESCRIPTION:
   PROJECT INCLUDES INSTALLATION OF MAST ARMS, FOUNDATIONS AND NEW SIGNAL HEADS. CONTROL EQUIPMENT, SIGNAL PROGRAMMER, SIGNS, AND ELECTRICAL SERVICE ARE EXISTING. DISCONNECT/RECONNECT OF ALL SIGNAL AND POWER WIRING IS THE CONTRACTOR'S RESPONSIBILITY AND SHALL BE COORDINATED WITH SCDOT AND LOCAL POWER COMPANY.
2. THE SIGNAL INSTALLATION SHALL CONFORM TO THE PROVISIONS OF THE MANUAL OF UNIFORM TRAFFIC CONTROL DEVICES, THE SCDOT STANDARD SPECIFICATIONS FOR ROADS AND STRUCTURES AND THE SCDOT TRAFFIC SIGNAL SPECIFICATIONS. INSTALLATION SHALL BE BY A SCDOT APPROVED SIGNAL CONTRACTOR.
3. ALL UNDERGROUND UTILITIES SHALL BE LOCATED PRIOR TO DRILLING, EXCAVATION, CONDUIT TRENCHING, BORING AND PRIOR TO MAST ARM ASSEMBLY FABRICATION.
4. PRIOR TO THE START OF CONSTRUCTION, THE CONTRACTOR MUST ENSURE THE PROPOSED FOUNDATION LOCATIONS ARE SUFFICIENT WITH REGARD TO UNDERGROUND UTILITIES. THE OWNER AND ENGINEER SHALL BE NOTIFIED IMMEDIATELY OF ANY UTILITY CONFLICTS.
5. CONCRETE TESTING FOR THE MAST ARM FOUNDATIONS MUST BE PERFORMED IN COMPLIANCE WITH SCDOT STANDARDS AND SPECIFICATIONS.
6. THE CONTRACTOR SHALL PREPARE A TRAFFIC CONTROL PLAN FOR APPROVAL BY SCDOT. THE PLAN SHALL BE SUBMITTED TO THE OWNER PRIOR TO THE PRECONSTRUCTION CONFERENCE.
7. PRIOR TO MAST ARM FABRICATION THE CONTRACTOR SHALL SUBMIT LAYOUT AND SHOP DRAWINGS FOR MAST ARMS, SIGNAL HEADS, SIGNAL HEAD MOUNTING ASSEMBLY, ANCHOR BOLTS, ADAPTOR PLATE, AND FOUNDATIONS TO THE ENGINEER AND SCDOT FOR APPROVAL.
8. CONTRACTOR SHALL REMOVE EXISTING SIGNAL EQUIPMENT INCLUDING POLES, SPAN WIRE AND SIGNAL HEADS AND RETURN TO SCDOT. CONTRACTOR SHALL ALSO REMOVE FOUNDATIONS. COORDINATE WITH SCDOT.
9. THE CONTRACTOR SHALL PRODUCE AND DELIVER TO THE ENGINEER AS-BUILT PLANS FOR THIS CONTRACT. THE PLANS SHALL SHOW THE FINAL LOCATION OF THE MAST ARMS, JUNCTION BOXES, AND ALL PROGRAMMING AND SIGNAL MODIFICATIONS. THE PLANS SHALL BE TIED TO THE SOUTH CAROLINA STATE PLANE COORDINATE SYSTEM AND PREPARED AND SEALED BY A REGISTERED LAND SURVEYOR OR A REGISTERED ENGINEER IN THE STATE OF SOUTH CAROLINA.

B. POLES AND FOUNDATION

1. STRUCTURES SHALL BE AS SHOWN ON MAST ARM DETAIL SHEET.
2. NEW POLES ARE TO BE LOCATED A MINIMUM OF 6 FT. BEHIND THE FACE OF CURB AND/OR 10 FT. FROM THE EDGE OF PAVEMENT.
3. THE CONTRACTOR SHALL SUBMIT DETAILED SHOP DRAWINGS FOR MAST ARMS AND FOUNDATION DESIGN TO THE ENGINEER AND SCDOT FOR APPROVAL PRIOR TO FABRICATION. THE FOUNDATION AND MAST ARM DESIGN SHALL BE SEALED BY A PROFESSIONAL ENGINEER REGISTERED IN THE STATE OF S.C.
4. MAST ARM FOUNDATIONS SHALL HAVE (3) 2" CONDUIT PENETRATIONS. ONE SHALL BE CAPPED FOR FUTURE LUMINAIRE POWER.

C. CONTROLLER AND FOUNDATIONS

1. CONTROLLER AND CONTROLLER FOUNDATION ARE EXISTING. CONTRACTOR SHALL COORDINATE WITH SCDOT FOR RE-PROGRAMMING CONTROLLER
2. CONTRACTOR SHALL INSTALL NEW PEDESTRIAN SIGNALS. MOUNT NEW SIGNALS TO NEW MAST ARMS (2P, 4P, 6P, 8P). COORDINATE WITH SCDOT FOR PROGRAMMING.

D. TRAFFIC SIGNAL HEADS

1. SIGNAL HEAD SECTION SHALL BE 12" CAST POLYCARBONATE, AND SHALL MEET SCDOT SPECIFICATIONS.
2. TRAFFIC SIGNAL HEADS, PEDESTRIAN SIGNAL HEADS, AND PUSH BUTTON ASSEMBLIES SHALL RECEIVE THE SAME TYPE COATING AS MAST ARMS AND SHALL MATCH COLOR.
3. CONTRACTOR SHALL PROVIDE COLOR SAMPLES FOR MAST ARMS AND SIGNAL HEADS.
4. MAST ARM SIGNAL HEADS SHALL BE LOCATED IN ACCORDANCE WITH THE MUTCD.

E. DETECTORS

1. DETECTOR LOOPS ARE EXISTING.

F. CONDUIT, CONDUCTORS AND ELECTRICAL

1. UNDERGROUND ELECTRICAL SERVICE SHALL BE OBTAINED FROM THE NEAREST POSSIBLE SOURCE. COORDINATE FEED WITH SCDOT AND LOCAL POWER COMPANY.
2. ALL CONDUIT ENTERING JUNCTION BOX SHALL NOT EXTEND OVER 2" MINIMUM NOR 3" MAXIMUM.
3. COORDINATE INSTALLATIONS OF MAST ARMS WITH LOCAL POWER/UTILITY COMPANY WITH REGARD TO OVERHEAD UTILITIES.

LEGEND

+ DENOTES EXISTING SPOT ELEVATIONS
MA-X DENOTES MAST ARM NO.
(6) DENOTES EXISTING SIGNAL HEADS
(6P) DENOTES NEW SIGNAL HEADS

SOUTH CAROLINA PROFESSIONAL ENGINEER No. 24211 RUSSELL W. CONNELLY JR. LICENSED

TOWN OF SUMMERVILLE 7847

THE TOWN OF SUMMERVILLE
TOWN HALL
200 SOUTH MAIN STREET
SUMMERVILLE, S.C. 29483
TELEPHONE (843) 851-4225
FAX (843) 832-8182

HWY 17A AND AZALEA SQ. BLVD. INTERSECTION

TOWN OF SUMMERVILLE
MAST ARMS
SUMMERVILLE, SOUTH CAROLINA

DATE:	AUGUST,2014
DESIGNED:	PBW
DRAWN:	KAB
CHECKED:	PBW
SCALE:	AS SHOWN
SHEET NO.	G-3
OF:	

REVISIONS			
SYM.	DESCRIPTION	DATE	BY

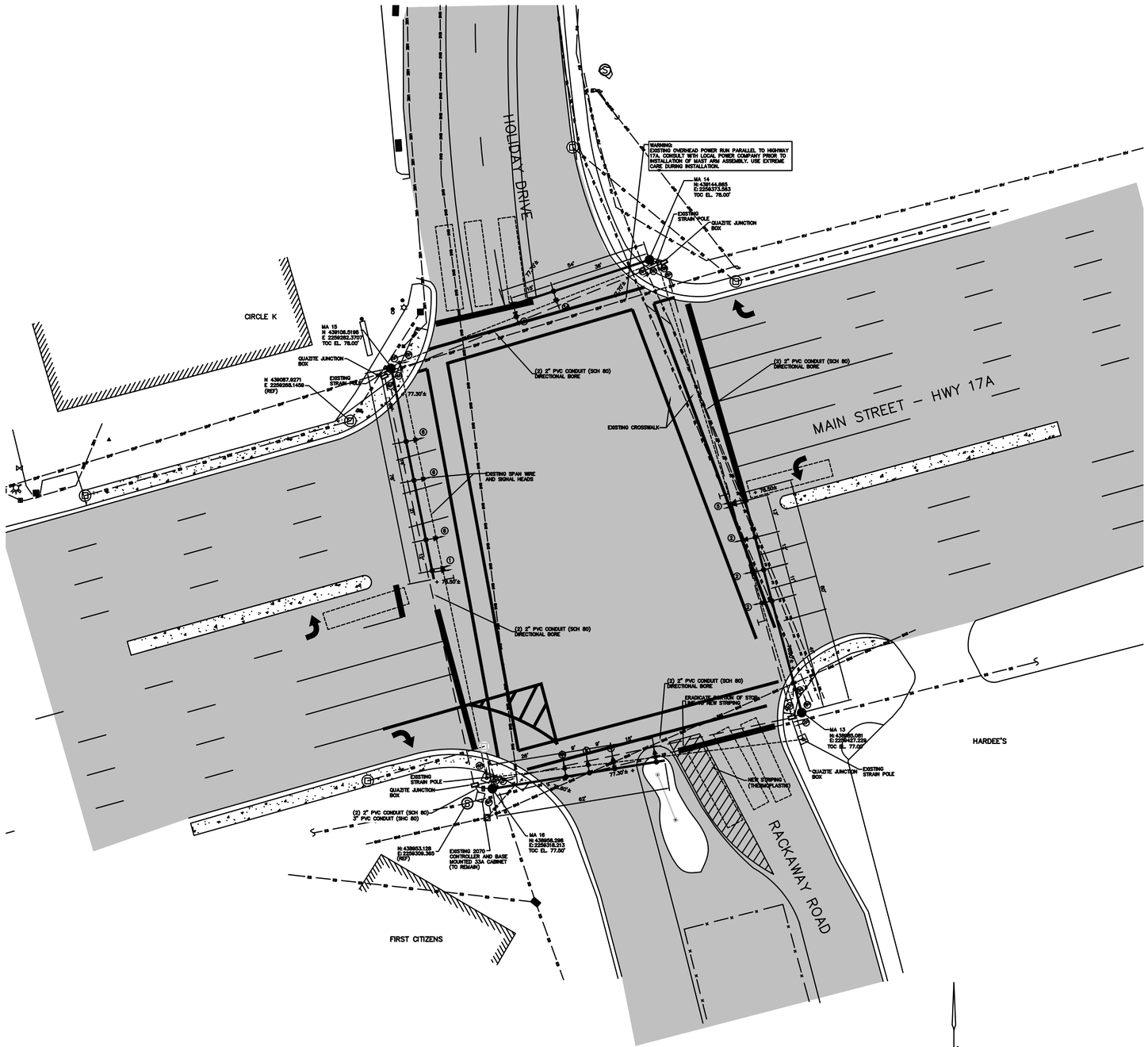

INTERSECTION MAST ARM LAYOUT PLAN

SCALE: 1" = 20'

A. GENERAL

1. PROJECT DESCRIPTION:
   PROJECT INCLUDES INSTALLATION OF MAST ARMS, FOUNDATIONS AND NEW SIGNAL HEADS. CONTROL EQUIPMENT, SIGNAL PROGRAMMER, SIGNS, AND ELECTRICAL SERVICE ARE EXISTING. DISCONNECT/RECONNECT OF ALL SIGNAL AND POWER WIRING IS THE CONTRACTOR'S RESPONSIBILITY AND SHALL BE COORDINATED WITH SCDOT AND LOCAL POWER COMPANY.
2. THE SIGNAL INSTALLATION SHALL CONFORM TO THE PROVISIONS OF THE MANUAL OF UNIFORM TRAFFIC CONTROL DEVICES, THE SCDOT STANDARD SPECIFICATIONS FOR ROADS AND STRUCTURES AND THE SCDOT TRAFFIC SIGNAL SPECIFICATIONS. INSTALLATION SHALL BE BY A SCDOT APPROVED SIGNAL CONTRACTOR.
3. ALL UNDERGROUND UTILITIES SHALL BE LOCATED PRIOR TO DRILLING, EXCAVATION, CONDUIT TRENCHING, BORING AND PRIOR TO MAST ARM ASSEMBLY FABRICATION.
4. PRIOR TO THE START OF CONSTRUCTION, THE CONTRACTOR MUST ENSURE THE PROPOSED FOUNDATION LOCATIONS ARE SUFFICIENT WITH REGARD TO UNDERGROUND UTILITIES. THE OWNER AND ENGINEER SHALL BE NOTIFIED IMMEDIATELY OF ANY UTILITY CONFLICTS.
5. CONCRETE TESTING FOR THE MAST ARM FOUNDATIONS MUST BE PERFORMED IN COMPLIANCE WITH SCDOT STANDARDS AND SPECIFICATIONS.
6. THE CONTRACTOR SHALL PREPARE A TRAFFIC CONTROL PLAN FOR APPROVAL BY SCDOT. THE PLAN SHALL BE SUBMITTED TO THE OWNER PRIOR TO THE PRECONSTRUCTION CONFERENCE.
7. PRIOR TO MAST ARM FABRICATION THE CONTRACTOR SHALL SUBMIT LAYOUT AND SHOP DRAWINGS FOR MAST ARMS, SIGNAL HEADS, SIGNAL HEAD MOUNTING ASSEMBLY, ANCHOR BOLTS, ADAPTOR PLATE, AND FOUNDATIONS TO THE ENGINEER AND SCDOT FOR APPROVAL.
8. CONTRACTOR SHALL REMOVE EXISTING SIGNAL EQUIPMENT INCLUDING POLES, SPAN WIRE AND SIGNAL HEADS AND RETURN TO SCDOT. CONTRACTOR SHALL ALSO REMOVE FOUNDATIONS. COORDINATE WITH SCDOT.
9. THE CONTRACTOR SHALL PRODUCE AND DELIVER TO THE ENGINEER AS–BUILT PLANS FOR THIS CONTRACT. THE PLANS SHALL SHOW THE FINAL LOCATION OF THE MAST ARMS, JUNCTION BOXES, AND ALL PROGRAMMING AND SIGNAL MODIFICATIONS. THE PLANS SHALL BE TIED TO THE SOUTH CAROLINA STATE PLANE COORDINATE SYSTEM AND PREPARED AND SEALED BY A REGISTERED LAND SURVEYOR OR A REGISTERED ENGINEER IN THE STATE OF SOUTH CAROLINA.

B. POLES AND FOUNDATION

1. STRUCTURES SHALL BE AS SHOWN ON MAST ARM DETAIL SHEET.
2. NEW POLES ARE TO BE LOCATED A MINIMUM OF 6 FT. BEHIND THE FACE OF CURB AND/OR 10 FT. FROM THE EDGE OF PAVEMENT.
3. THE CONTRACTOR SHALL SUBMIT DETAILED SHOP DRAWINGS FOR MAST ARMS AND FOUNDATION DESIGN TO THE ENGINEER AND SCDOT FOR APPROVAL PRIOR TO FABRICATION. THE FOUNDATION AND MAST ARM DESIGN SHALL BE SEALED BY A PROFESSIONAL ENGINEER REGISTERED IN THE STATE OF S.C.
4. MAST ARM FOUNDATIONS SHALL HAVE (3) 2" CONDUIT PENETRATIONS. ONE SHALL BE CAPPED FOR FUTURE LUMINAIRE POWER.

C. CONTROLLER AND FOUNDATIONS

1. CONTROLLER AND CONTROLLER FOUNDATION ARE EXISTING. CONTRACTOR SHALL COORDINATE WITH SCDOT FOR RE–PROGRAMMING CONTROLLER
2. CONTRACTOR SHALL INSTALL NEW PEDESTRIAN SIGNALS. MOUNT NEW SIGNALS TO NEW MAST ARMS (2P, 4P, 6P, 8P). COORDINATE WITH SCDOT FOR PROGRAMMING.

D. TRAFFIC SIGNAL HEADS

1. SIGNAL HEAD SECTION SHALL BE 12" CAST POLYCARBONATE, AND SHALL MEET SCDOT SPECIFICATIONS.
2. TRAFFIC SIGNAL HEADS, PEDESTRIAN SIGNAL HEADS, AND PUSH BUTTON ASSEMBLIES SHALL RECEIVE THE SAME TYPE COATING AS MAST ARMS AND SHALL MATCH COLOR.
3. CONTRACTOR SHALL PROVIDE COLOR SAMPLES FOR MAST ARMS AND SIGNAL HEADS.
4. MAST ARM SIGNAL HEADS SHALL BE LOCATED IN ACCORDANCE WITH THE MUTCD.

E. DETECTORS

1. DETECTOR LOOPS ARE EXISTING.

F. CONDUIT, CONDUCTORS AND ELECTRICAL

1. UNDERGROUND ELECTRICAL SERVICE SHALL BE OBTAINED FROM THE NEAREST POSSIBLE SOURCE. COORDINATE FEED WITH SCDOT AND LOCAL POWER COMPANY.
2. ALL CONDUIT ENTERING JUNCTION BOX SHALL NOT EXTEND OVER 2" MINIMUM NOR 3" MAXIMUM.
3. COORDINATE INSTALLATIONS OF MAST ARMS WITH LOCAL POWER/UTILITY COMPANY WITH REGARD TO OVERHEAD UTILITIES.

LEGEND

+ DENOTES EXISTING SPOT ELEVATIONS
MA–X DENOTES MAST ARM NO.
(6) DENOTES EXISTING SIGNAL HEADS
(6P) DENOTES NEW SIGNAL HEADS

SOUTH CAROLINA PROFESSIONAL ENGINEER No. 24211 RUSSELL W. CONNER, JR. LICENSED

THE TOWN OF SUMMERVILLE
TOWN HALL
200 SOUTH MAIN STREET
SUMMERVILLE, S.C. 29483
TELEPHONE (843) 851-4225
FAX (843) 832-8182

HWY 17A AND HOLIDAY DRIVE INTERSECTION

TOWN OF SUMMERVILLE
MAST ARMS
SUMMERVILLE, SOUTH CAROLINA

DATE:	AUGUST,2014
DESIGNED:	PBW
DRAWN:	KAB
CHECKED:	PBW
SCALE:	AS SHOWN
SHEET NO.	G-4
OF:	

REVISIONS			
SYM.	DESCRIPTION	DATE	BY

NOTE: SEE PLAN SHEETS FOR LOCATION, NUMBER, AND TYPE OF SIGNAL HEADS.

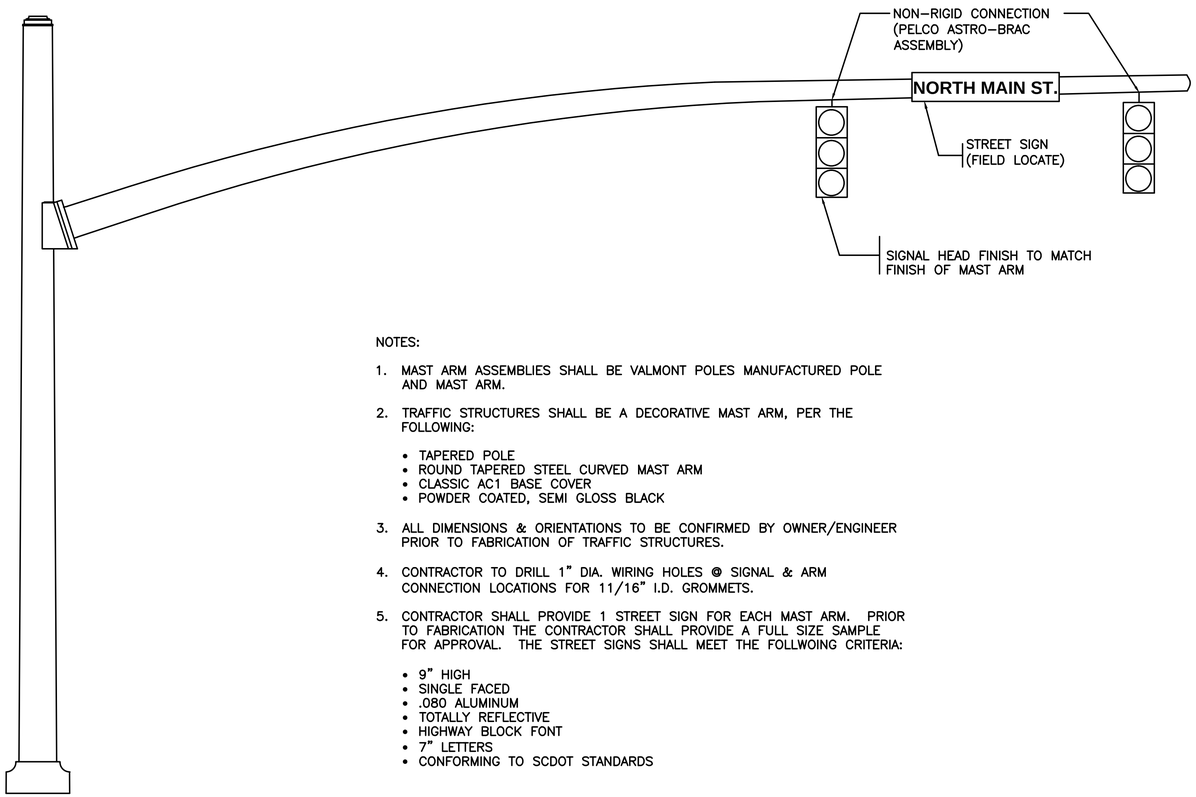

TRAFFIC ARM ELEVATION

N.T.S.

NOTES:

1. MAST ARM ASSEMBLIES SHALL BE VALMONT POLES MANUFACTURED POLE AND MAST ARM.
2. TRAFFIC STRUCTURES SHALL BE A DECORATIVE MAST ARM, PER THE FOLLOWING:
   - TAPERED POLE
   - ROUND TAPERED STEEL CURVED MAST ARM
   - CLASSIC AC1 BASE COVER
   - POWDER COATED, SEMI GLOSS BLACK
3. ALL DIMENSIONS & ORIENTATIONS TO BE CONFIRMED BY OWNER/ENGINEER PRIOR TO FABRICATION OF TRAFFIC STRUCTURES.
4. CONTRACTOR TO DRILL 1" DIA. WIRING HOLES @ SIGNAL & ARM CONNECTION LOCATIONS FOR 11/16" I.D. GROMMETS.
5. CONTRACTOR SHALL PROVIDE 1 STREET SIGN FOR EACH MAST ARM. PRIOR TO FABRICATION THE CONTRACTOR SHALL PROVIDE A FULL SIZE SAMPLE FOR APPROVAL. THE STREET SIGNS SHALL MEET THE FOLLWOING CRITERIA:
   - 9" HIGH
   - SINGLE FACED
   - .080 ALUMINUM
   - TOTALLY REFLECTIVE
   - HIGHWAY BLOCK FONT
   - 7" LETTERS
   - CONFORMING TO SCDOT STANDARDS

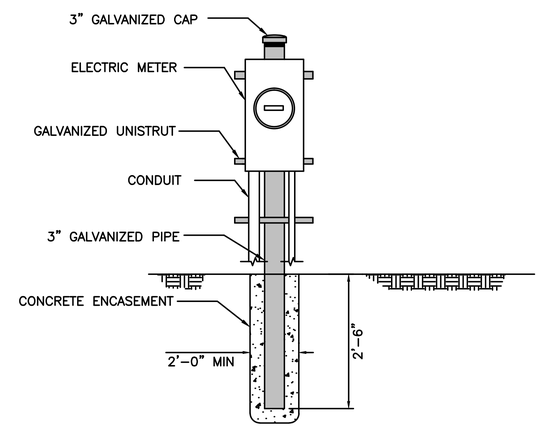

SINGLE POLE METER SUPPORT

N.T.S.

THE TOWN OF SUMMERVILLE
TOWN HALL
200 SOUTH MAIN STREET
SUMMERVILLE, S.C. 29483
TELEPHONE (843) 851-4225
FAX (843) 832-8182

ELEVATION AND DETAILS

TOWN OF SUMMERVILLE
MAST ARMS
SUMMERVILLE, SOUTH CAROLINA

DATE:	AUGUST,2014
DESIGNED:	PBW
DRAWN:	KAB
CHECKED:	PBW
SCALE:	AS SHOWN
SHEET NO.	G-5
OF:	

FED. ROAD DIV. NO.	STATE	COUNTY	FILE NO.	PROJECT NO.	ROUTE NO.	SHEET NO.	TOTAL SHEETS
_	___	_____	_____	____	____	___	__

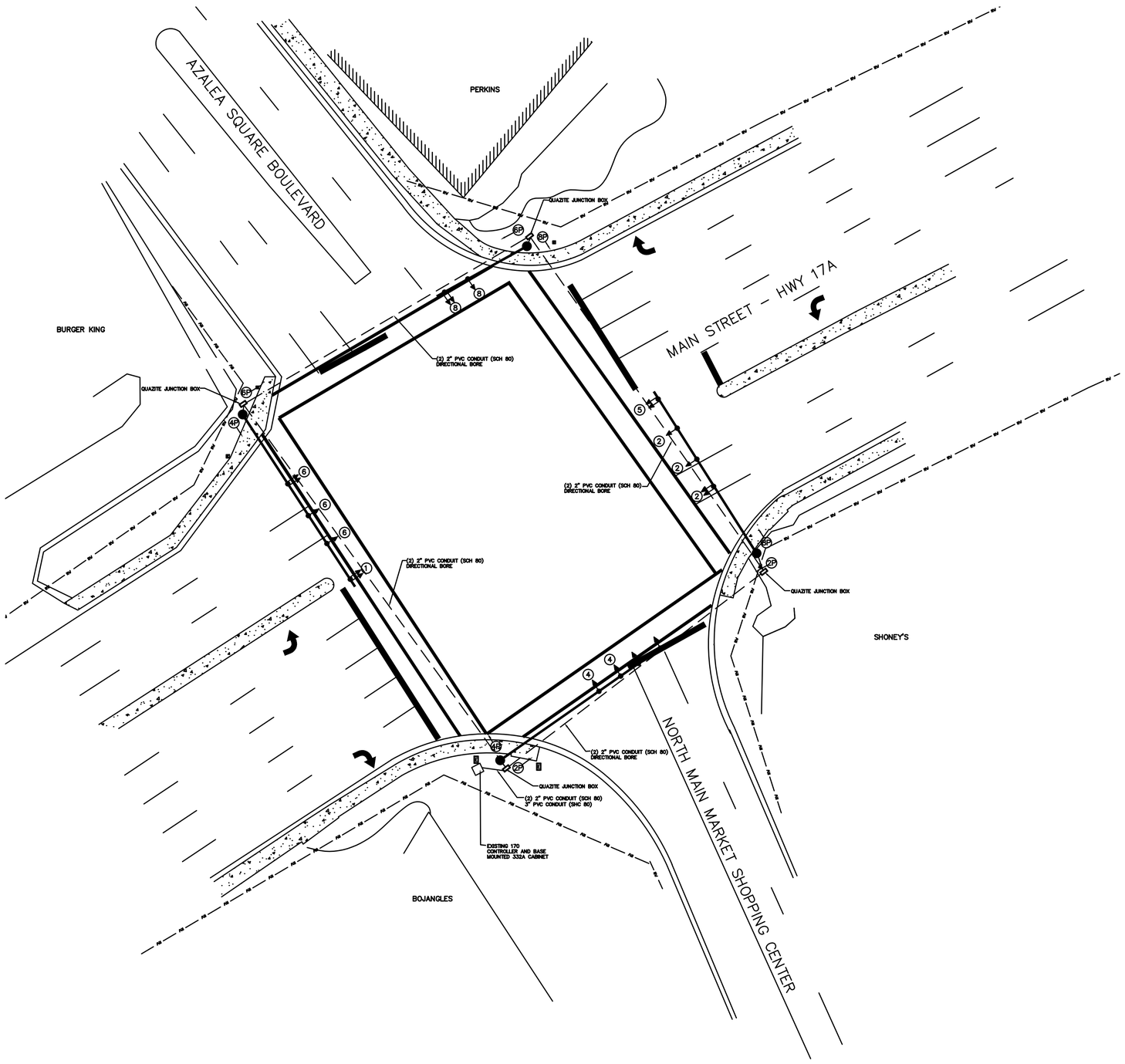

NOTES:

1. LOCATE ALL EXISTING UNDERGROUND UTILITIES PRIOR TO CONDUIT TRENCHING, BORING AND MAST ARM FOUNDATION EXCAVATION.
2. ALL WORKMANSHIP AND MATERIALS SHALL CONFORM TO THE SOUTH CAROLINA DEPARTMENT OF TRANSPORTATION "STANDARD SPECIFICATIONS FOR HIGHWAY CONSTRUCTION" LATEST EDITION AND THE MANUAL OF UNIFORM TRAFFIC CONTROL DEVICES (MUTCD).
3. ALL PULLBOXES SHALL BE FIELD LOCATED TO AVOID CONFLICTS WITH UNDERGROUND UTILITIES.
4. SIGNAL HEADS SHALL BE ALIGNED IN ACCORDANCE WITH SCDOT STANDARD SPECIFICATIONS AND THE MUTCD.
5. ALL SIGNAL WORK SHALL BE PERFORMED ACCORDING TO SCDOT STANDARD SPECIFICATIONS AND THE MUTCD. INSTALLATION SHALL BE BY AN APPROVED SIGNAL CONTRACTOR.
6. THE CONTRACTOR SHALL UTILIZE EXISTING EQUIPMENT, INCLUDING CONTROL CABINET, JUNCTION BOXES, AND DETECTION LOOPS.
7. THE CONTRACTOR SHALL REPLACE THE EXISTING SIGNAL HEADS WITH NEW SIGNAL HEADS. THE EXISTING SIGNAL HEADS SHALL BE RETURNED TO SCDOT. THE CONTRACTOR SHALL BE RESPONSIBLE FOR REPROGRAMMING THE SIGNALS, THE EXISTING SIGNAL PLAN IS ATTACHED AS A REFERENCE.
8. THE CONTRACTOR, IN COORDINATION WITH SCDOT, SHALL PROVIDE AS BUILT INFORMATION FOR REPROGRAMMING THE SIGNALS. THIS INFORMATION WILL BE PROVIDED TO THE SCDOT ON THE OFFICIAL ASBUILT DRAWING TO BE COMPLETED AT THE END OF THE PROJECT.
9. RELOCATE EXISTING ELECTRICAL SERVICE TO NEW SUPPORT. COORDINATE WITH UTILITY COMPANY FOR RELOCATION OF SERVICE.

DATE	REVISIONS

SCDOT

SOUTH CAROLINA
DEPARTMENT OF TRANSPORTATION
ENGINEERING DIVISION
Charleston, SC

SUBJECT TITLE: SIGNAL PLAN

SPECIFIC LOCATION: HWY 17A AND AZALAE DRIVE INTERSECTION

CITY: SUMMERVILLE

COUNTY: BERKELEY

DESIGNED	PBW
DRAWN	KAB
CHECKED	PBW
REVIEWED	___
RECOMMENDED	___

APPROVED BY

DISTRICT # __ TRAFFIC ENGINEER

DISTRICT ENGINEERING ADMIN.

SCALE	DATE	SHEET NO.	INDEX NO.
1"= 20 '	02/09	OF	TS-1

FED. ROAD DIV. NO.	STATE	COUNTY	FILE NO.	PROJECT NO.	ROUTE NO.	SHEET NO.	TOTAL SHEETS

SIGNAL EQUIPMENT

ONE (1) 8 PHASE FULLY ACTUATED STANDARD
270 CONTROLLER WITH FLASHER, SIGNAL MONITOR UNIT,
AND BASE - MOUNTED 332a CABINET. EXT. PROP.

12 MODEL 222, (2)-CHANNEL VEHICLE DETECTOR UNITS
12 PEDESTRIAN SIGNALS:
8 PEDESTRIAN PUSH BUTTONS: W/ACT. & SIGN

VEHICLE SIGNALS: EXT. PROP.

HEAD NUMBER	1	2	3	3 conc	4	5	6			8	2P	4P	6P	8P
LENS	RR	R			R	RR	R			R				
		Y			Y		Y			Y				
		G			G		G			G				
PHASE	1	2	3	3	4	5	6			8	2	4	6	7
SIZE	12"	12"	12"	12"	12"	12"	12"			12"	16"	16"	16"	16"
QUANTITY	1	3	1	1	2	1	3			2	2	2	2	2

OLA OLC
OLB OLD
METAL POLES AS NECESSARY: EXT. PROP. M
WOOD POLES AS NECESSARY: EXT. PROP. W

NEMA PHASING

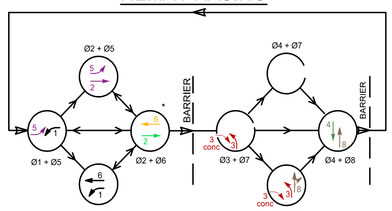

NOTE: ACTUATED PHASES HAVING NO CALL SHALL BE SKIPPED

* STREET COORDINATED

FLASHING OPERATION

S1 LEFT TURN SIGNAL

SIGNAL DISPLAY SEQUENCE CHART

G-GREEN
Y-YELLOW
R-RED
G-G, ARROW
Y-Y, ARROW
W-WALK **
DW-DON'T WALK

PHASE ON (A)	NON-CONFLICTION PHASE (B)	CONFLICTING PHASE (C)
1	5, 6, 6P	2,3,4, 2P, 4P, 8P
2	5, 6, 2P, 6P	1,3, 4, 8, 4P, 8P
3	8P	1,2, 4, 5, 6, 2P, 4P, 6P
4	8, 4P,	1,2, 3,5, 6, 2P, 6P 8P
5	1, 2, 2P,	3,4, 6, 4P, 6P, 8P
6	1, 2, 2P, 5P	3,4, 5, 8,4P, 8P
3, 4, 4P,		1, 2, 5, 8, 2P, 6P,
8	3, 8, 8P	1, 2,4, 5, 6, 2P,4P,6P

'C' = COORDINATE Ø2 , Ø6

NOTE A: ANY ACTUATED PHASE FOR WHICH THERE IS NO CALL SHALL BE OMITTED.
NOTE B: WHEN ONE PHASE IS ON ALONE, ANY/NON-CONFLICTING PHASE MAY START TIMING CONCURRENTLY WITHOUT A CLEARANCE INTERVAL (SEE CHART).
* CONFLICTING PHASES REQUIRE A CLEARANCE INTERVAL.
** WHEN CALLED, DISPLAY SOLID WALKING PERSON AND TIMES OUT WALK TIMING, THEN DISPLAYS FLASHING WALKING HAND AND TIMES WALK CLEARANCE (DON'T WALK TIMING), THEN DISPLAYS A SOLID 'UPRAISED HAND'.

SIGNAL DISPLAY SEQUENCE (PREFERENTIAL PHASING)

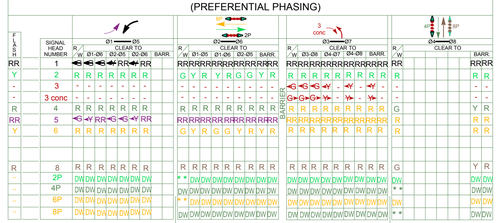

ALTERNATE PHASES

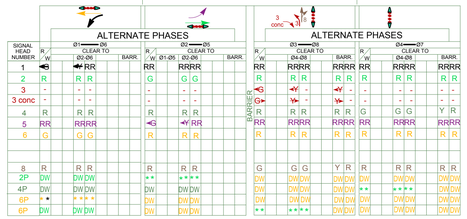

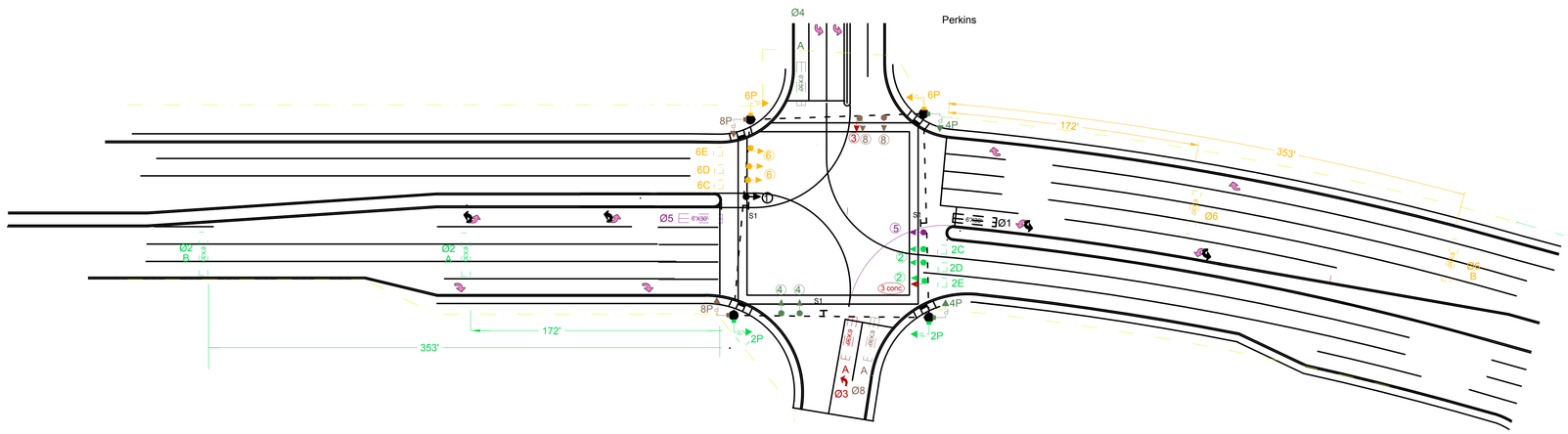

LOOP DETECTOR INSTALLATION CHART

PHASE/ LOOP LTR#	DETECTOR AMP NO.	DETECTOR CHAN NO.	WIRED TO PHASE(S)	X LOCK	X NON-LOCK	X PULSE	X PRES	OPERATION DELAY SEC	OPERATION EXT SEC	SPECIAL FEATURES TIME OF DAY-TOD, SWITCHING, etc.	LOOP DESIGN SIZE X	LOOP DESIGN NO.OF TURNS	LOOP DESIGN DIST. FROM ℄
1			1		X		X			QUADRAPOLE	6'X30'	3	-3
2A			2	X			X				6'X30'	3	172'
2B			2	X			X				6'X30'	3	353'
2C			2		X		X			SYSTEM LOOPS	6'X6'	4	-148'
2D			2		X		X			SYSTEM LOOPS	6'X'6	4	-148'
2E			2		X		X			SYSTEM LOOPS	6'X6'	4	-148'
3			3		X		X			QUADRAPOLE	6'X30'	3	-3
4			4		X		X			QUADRAPOLE	6'X30'	3	-3
5			5		X		X			QUADRAPOLE	6'X30'	3	-3
6A			6	X			X				6'X30'	3	172'
6B			6	X			X				6'X30'	3	353'
6C			6		X		X			SYSTEM LOOPS	6'X6'	4	-148'
6D			6		X		X			SYSTEM LOOPS	6'X6'	4	-148'
6E			6		X		X			SYSTEM LOOPS	6'X6'	4	-148'
8			8		X		X			QUADRAPOLE	6'X30'	3	-3

SIGNAL TIMINGS

INTERVAL	PHASE 1	2	3	4	5	6		8
WALK	-	7	_	7	_	7		7
DON'T WALK		34		36		29		31
MIN INITIAL	10	25	10	15	10	25		15
MAX INITIAL								
ADD/VEH								
VEH EXT	3	6	3	3.5	3	6		3.5
TIM BFR REDUC								
TIME TO REDUC								
MIN GAP								
MAX LIMIT	20	85	15	32	20	85		32
MAXIMUM 2								
YELLOW	4	4	4	4	4	4		4
RED CLEAR	2	2	2	2	2	2		2

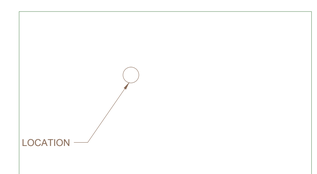

ROUTE NUMBER	US-17A		SHOPPING CENTER D/W	
APPROACH DIRECTION	EB	WB	NB	SB
SIGNAL DESIGN SPEED	40	40	25	25
GRADE (%)	-0.04	-0.06	0.04	*0.0

* Assume

* ESTIMATED FILE # : 8,790 SHEET # :7,7A,7B,8

DATE	REVISIONS
09/08	AS BUILT
09/08	REVISE WALK AND PED CLEARANCE TIMES.

SOUTH CAROLINA DEPARTMENT OF TRANSPORTATION
ENGINEERING DIVISION
CHARLESTON, S.C.

SUBJECT TITLE: SIGNAL PLAN

SPECIFIC LOCATION: US-17A with PERKINS/ SHOPPING CENTER D/W

CITY: SUMMERVILLE COUNTY: BERKELEY

DESIGNED
DRAWN ctr
CHECKED
REVIEWED
RECOMMENDED

APPROVED BY
DISTRICT 6 TRAFFIC ENGINEER
DISTRICT ENGINEER ANMINISTRATOR

SCALE	DATE	SHEET NO.	INDEX NO.
1"= 50 '	09/08	1 OF 1	8-017

REF-1

FED. ROAD DIV. NO.	STATE	COUNTY	FILE NO.	PROJECT NO.	ROUTE NO.	SHEET NO.	TOTAL SHEETS
_	___	_____	_____	___	____	___	__

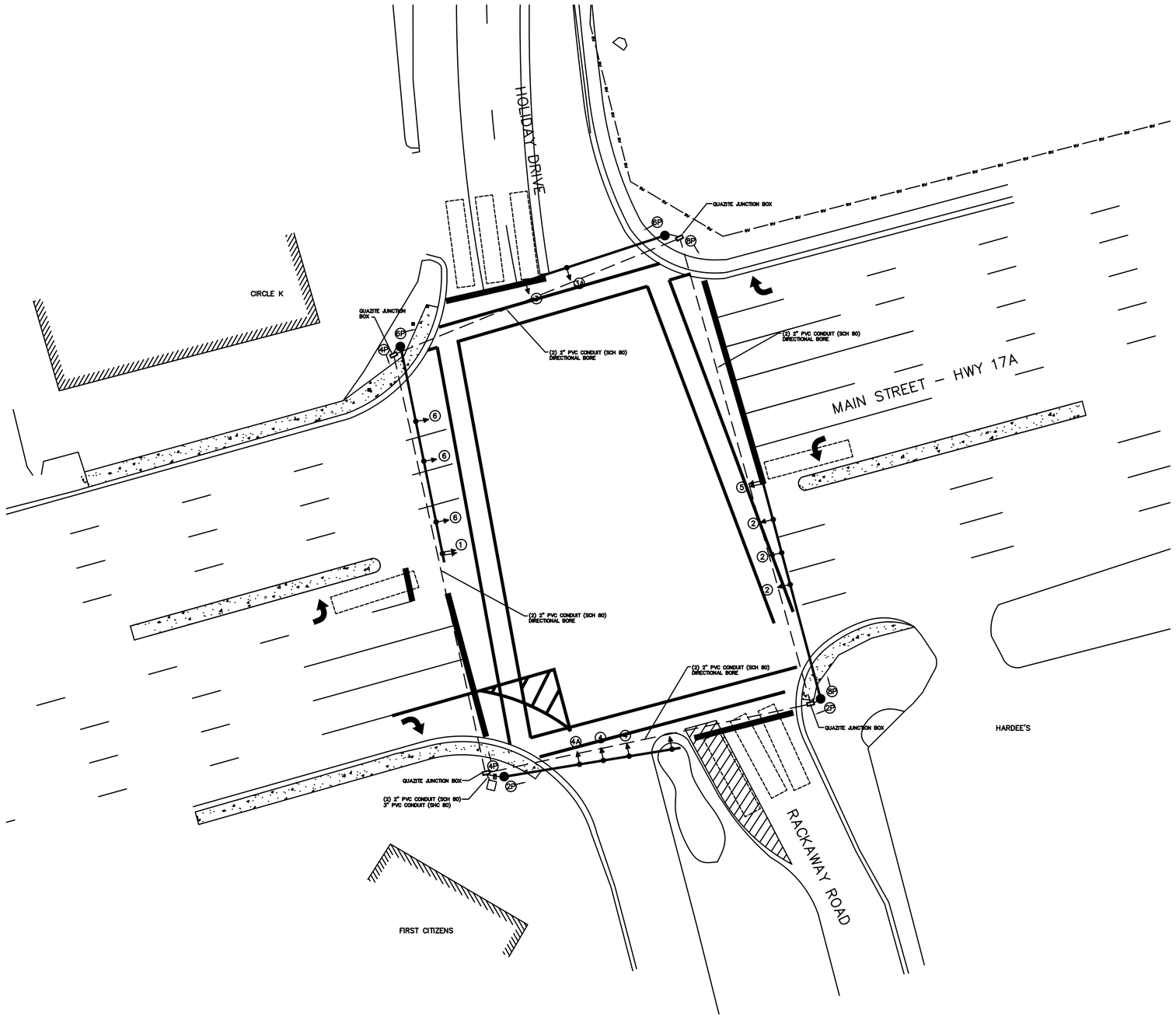

NOTES:

1. LOCATE ALL EXISTING UNDERGROUND UTILITIES PRIOR TO CONDUIT TRENCHING, BORING AND MAST ARM FOUNDATION EXCAVATION.
2. ALL WORKMANSHIP AND MATERIALS SHALL CONFORM TO THE SOUTH CAROLINA DEPARTMENT OF TRANSPORTATION "STANDARD SPECIFICATIONS FOR HIGHWAY CONSTRUCTION" LATEST EDITION AND THE MANUAL OF UNIFORM TRAFFIC CONTROL DEVICES (MUTCD).
3. ALL PULLBOXES SHALL BE FIELD LOCATED TO AVOID CONFLICTS WITH UNDERGROUND UTILITIES.
4. SIGNAL HEADS SHALL BE ALIGNED IN ACCORDANCE WITH SCDOT STANDARD SPECIFICATIONS AND THE MUTCD.
5. ALL SIGNAL WORK SHALL BE PERFORMED ACCORDING TO SCDOT STANDARD SPECIFICATIONS AND THE MUTCD. INSTALLATION SHALL BE BY AN APPROVED SIGNAL CONTRACTOR.
6. THE CONTRACTOR SHALL UTILIZE EXISTING EQUIPMENT, INCLUDING CONTROL CABINET, JUNCTION BOXES, AND DETECTION LOOPS.
7. THE CONTRACTOR SHALL REPLACE THE EXISTING SIGNAL HEADS WITH NEW SIGNAL HEADS. THE EXISTING SIGNAL HEADS SHALL BE RETURNED TO SCDOT. THE CONTRACTOR SHALL BE RESPONSIBLE FOR REPROGRAMMING THE SIGNALS, THE EXISTING SIGNAL PLAN IS ATTACHED AS A REFERENCE.
8. THE CONTRACTOR, IN COORDINATION WITH SCDOT, SHALL PROVIDE AS BUILT INFORMATION FOR REPROGRAMMING THE SIGNALS. THIS INFORMATION WILL BE PROVIDED TO THE SCDOT ON THE OFFICIAL ASBUILT DRAWING TO BE COMPLETED AT THE END OF THE PROJECT.
9. RELOCATE EXISTING ELECTRICAL SERVICE TO NEW SUPPORT. COORDINATE WITH UTILITY COMPANY FOR RELOCATION OF SERVICE.

DATE	REVISIONS

SCDOT

SOUTH CAROLINA
DEPARTMENT OF TRANSPORTATION
ENGINEERING DIVISION
Charleston, SC

SUBJECT TITLE: SIGNAL PLAN

SPECIFIC LOCATION: HWY 17A AND HOLIDAY DRIVE INTERSECTION

CITY: SUMMERVILLE

COUNTY: BERKELEY

DESIGNED	PBW
DRAWN	KAB
CHECKED	PBW
REVIEWED	___
RECOMMENDED	___

APPROVED BY

DISTRICT # __ TRAFFIC ENGINEER

DISTRICT ENGINEERING ADMIN.

SCALE	DATE	SHEET NO.	INDEX NO.
1"= 20 '	02/09	OF	TS-2

FED. ROAD DIV. NO.	STATE	COUNTY	FILE NO.	PROJECT NO.	ROUTE NO.	SHEET NO.	TOTAL SHEETS

SIGNAL EQUIPMENT

One (1) 8 PHASE FULLY ACTUATED STANDARD
2070 CONTROLLER WITH FLASHER, SIGNAL MONITOR UNIT,
AND Base - MOUNTED 332A CABINET. EXT. PROP.

6 MODEL 222, (2)-CHANNEL VEHICLE DETECTOR UNITS
8 PEDESTRIAN PUSHBUTTONS: W/ACT.
8 PEDESTRIAN SIGNALS: EXT. & SIGN

VEHICLE SIGNALS: EXT. PROP.

HEAD NUMBER	1	1_{conc}	2	3	3A	3B	3_{conc}	4	4A	4_{conc}	5	6	2P	3P	4P	6P
LENS			R Y G	R Y G	R Y G	R Y G		R Y G				R Y G				
PHASE	1	1	2	3	3	3	3	4	4	4	5	6	2	3	4	6
SIZE	12"	12"	12"	12"	12"	12"	12"	12"	12"	12"	12"	12"	16"	16"	16"	16"
QUANTITY	1	1	3	1	1	1	1	1	2	1	1	4	2	2	2	2

OLA OLC
OLB OLD
METAL POLES AS NECESSARY: EXT. ○ PROP. ●M
WOOD POLES AS NECESSARY: EXT. ◒ PROP. ●W

NEMA PHASING

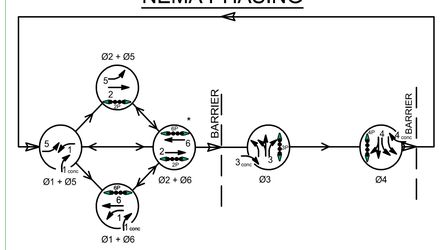

NOTE: ACTUATED PHASES HAVING NO CALL, SHALL BE SKIPPED

* Ø2 + Ø6 STREET COORDINATED

FLASHING OPERATION

SIGNAL DISPLAY SEQUENCE CHART

G-GREEN
Y-YELLOW
R-RED
G-G, ARROW
Y-Y, ARROW
W-WALK **
DW-DON'T WALK

PHASE ON (A)	NON-CONFLICTION PHASE (B)	CONFLICTING PHASE *
1	5, 6, 6P	2,3,4, 2P, 3P,4P,
2	5,6, 2P, 6P	1,3,4, 3P,4P,
3	3P,	1,2,4,5,6,2P,4P, 6P
4	4P,	1,2,3,5,6, 2P,3P,6P
5	1, 2, 2P	3,4,6, 3P,4P, 6P,
6	1, 2, 2P, 6P	3,4,5, 3P,4P,

'C' = COORDINATE Ø2 ; Ø6

NOTE A: ANY ACTUATED PHASE FOR WHICH THERE IS NO CALL SHALL BE OMITTED.
NOTE B: WHEN ONE PHASE IS ON ALONE, ANY NON-CONFLICTING PHASE MAY START TIMING CONCURRENTLY WITHOUT A CLEARANCE INTERVAL (SEE CHART).
* CONFLICTING PHASES REQUIRE A CLEARANCE INTERVAL.
** WHEN CALLED, DISPLAY SOLID 'WALKING PERSON' AND TIMES OUT WALK TIMING. THEN DISPLAYS FLASHING 'UPRAISED HAND' AND TIMES WALK CLEARANCE (DON'T WALK TIMING), THEN DISPLAYS A SOLID 'UPRAISED HAND'.

SIGNAL DISPLAY SEQUENCE (PREFERENTIAL PHASING)

FLASH	SIGNAL HEAD NUMBER	Ø1 — Ø5 R/W	CLEAR TO Ø1-Ø6	CLEAR TO Ø2-Ø5	CLEAR TO Ø2-Ø6	BARR.	Ø2 — Ø6 R/W	CLEAR TO Ø1-Ø5	CLEAR TO Ø1-Ø6	CLEAR TO Ø2-Ø5	BARR.	Ø3 R/W	CLEAR TO Ø4	BARR.	Ø4 R/W	CLEAR TO BARR.
	1															
--	1 conc	-	-	-	-	-	-	-	-	-	-	-	-	-	-	-
Y	2	R	R	R	R	R	G	Y	R	Y	R	G	Y	R	R	R
	3													Y		
R	3A	R	R	R	R	R	R	R	R	R	R	R	Y	R	R	R
R	3B	R	R	R	R	R	R	R	R	R	R	G	Y	R	R	R
--	3 conc	-	-	-	-	-	-	-	-	-	-				-	-
R	4	R	R	R	R	R	R	R	R	R	R	R	R	G		Y R
	4A															
--	4 conc	-	-	-	-	-	-	-	-	-	-	-	-	-	-	-
	5															
Y	6	R	R	R	R	R	G	Y	R	G	Y	R	Y	R	R	R
--	2P	DW	DW	DW	DW	DW	* *	DW	DW	DW	* *	* *	DW	DW	DW	DW
--	3P	DW	DW	DW	DW	DW	DW	DW	DW	DW	DW	DW	DW	DW	DW	DW
--	4P	DW	DW	DW	DW	DW	DW	DW	DW	DW	DW	DW	DW	DW	* *	DW
--	6P	DW	DW	DW	DW	DW	* *	DW	DW	* *	*	DW	DW	DW	DW	DW

ALTERNATE PHASES

SIGNAL HEAD NUMBER	Ø1 — Ø5 R/W	CLEAR TO Ø2-Ø6	BARR.	Ø2 — Ø6 R/W	CLEAR TO Ø1-Ø6	BARR.	BARRIER	Ø3 — Ø8 R/W	CLEAR TO BARR.	Ø4 — Ø7 R/W	CLEAR TO BARR.
1											
1 conc		-		-	-						
2	R	R R		G	G G						
3											
3A	R	R R		R	R R						
3B	R	R R		R	R R						
3 conc	-	- -		-	- -						
4	R	R R		R	R R						
4A											
4 conc	-	- -		-	- -						
5											
6	G	G G		R	R R						
2P	DW	DW DW		* *	* * *						
3P	DW	DW DW		DW	DW DW						
4P	DW	DW DW		DW	DW DW						
6P	* *	* * *		DW	DW DW						

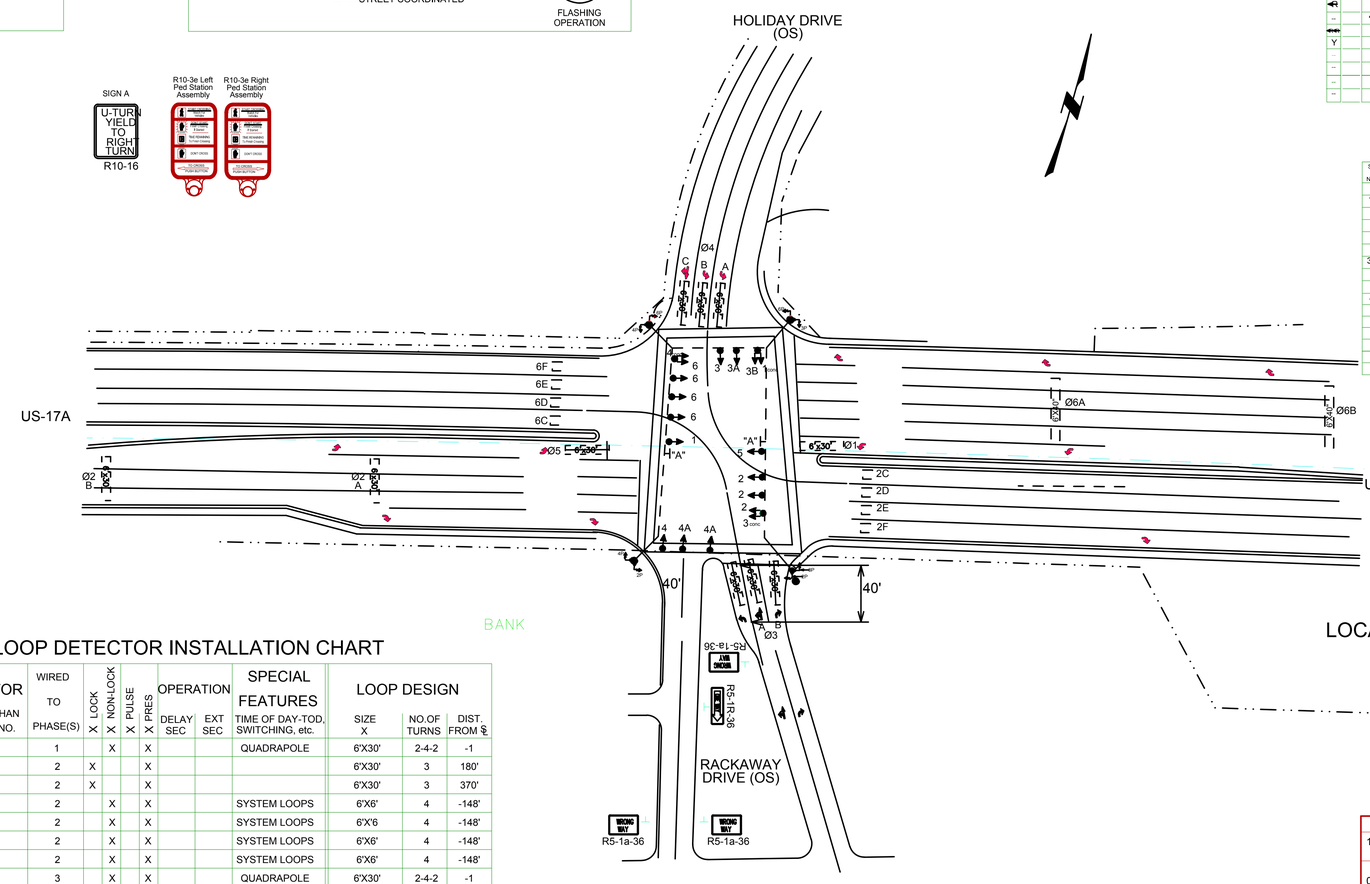

LOCATION

ROUTE NUMBER	US17A		RACK	HOLI
APPROACH DIRECTION	EB	WB	NB	SB
SIGNAL DESIGN SPEED	45	45	30	30
GRADE (%)	+0.1	+0.5	0.0	0.0

* ESTIMATED

FILE # : 8.790 SHEET # : 8

LOOP DETECTOR INSTALLATION CHART

PHASE/ LOOP LTR#	DETECTOR AMP NO.	DETECTOR CHAN NO.	WIRED TO PHASE(S)	X LOCK	X NON-LOCK	X PULSE	X PRES	OPERATION DELAY SEC	OPERATION EXT SEC	SPECIAL FEATURES TIME OF DAY-TOD, SWITCHING, etc.	LOOP DESIGN SIZE X	NO.OF TURNS	DIST. FROM ⊕
1			1		X		X			QUADRAPOLE	6'X30'	2-4-2	-1
2A			2	X			X				6'X30'	3	180'
2B			2	X			X				6'X30'	3	370'
2C			2		X		X			SYSTEM LOOPS	6'X6'	4	-148'
2D			2		X		X			SYSTEM LOOPS	6'X'6	4	-148'
2E			2		X		X			SYSTEM LOOPS	6'X6'	4	-148'
2E			2		X		X			SYSTEM LOOPS	6'X6'	4	-148'
3A			3		X		X			QUADRAPOLE	6'X30'	2-4-2	-1
3B			3		X		X			QUADRAPOLE	6'X30'	2-4-2	-1
4A			4		X		X			QUADRAPOLE	6'X30'	2-4-2	-1
4B			4		X		X			QUADRAPOLE	6'X30'	2-4-2	-1
4C			4		X		X			QUADRAPOLE	6'X30'	2-4-2	-1
5			5		X		X			QUADRAPOLE	6'X30'	2-4-2	-1
6A			6	X			X				6'X30'	3	180'
6B			6	X			X				6'X30'	3	370'
6C			6		X		X			SYSTEM LOOPS	6'X6'	4	-148'
6D			6		X		X			SYSTEM LOOPS	6'X6'	4	-148'
6E			6		X		X			SYSTEM LOOPS	6'X6'	4	-148'
6E			6		X		X			SYSTEM LOOPS	6'X6'	4	-148'

SIGNAL TIMINGS

INTERVAL	PHASE 1	2	3	4	5	6		
WALK		7	7	7		7		
DON'T WALK		30	44	43		24		
MIN INITIAL	4	18	5	5	4	18		
MAX INITIAL								
ADD/VEH								
VEH EXT	3.0	6.0	3.5	3.5	3.0	6.0		
TIM BFR REDUC								
TIME TO REDUC								
MIN GAP								
MAX LIMIT	40	70	47	47	20	70		
MAXIMUM 2								
YELLOW	4.5	4.5	4.0	4.0	4.5	4.5		
RED CLEAR	2.0	2.0	2.7	2.7	2.0	2.0		

DATE	REVISIONS
12/07	Split phased side street approaches
01/08	REVISE PHASING INSTALL CONC PHASE 1 & 3
03/11	REVISE SIGNAL HEADS AND SIGNS BY BH

DESIGNED
DRAWN ctr
CHECKED
REVIEWED
RECOMMENDED

SOUTH CAROLINA DEPARTMENT OF TRANSPORTATION
ENGINEERING DIVISION
COLUMBIA , S.C.

SUBJECT TITLE: SIGNAL PLAN

SPECIFIC LOCATION: US17A AND HOLIDAY DR (S-8-1259) / RACKAWAY DR. (O.S.)

CITY: SUMMERVILLE COUNTY: BERKELEY

APPROVED BY

DISTRICT # TRAFFIC ENGINEER ENGINEER

SCALE	DATE	SHEET NO.	INDEX NO.
1"= 50'	12/07	1 OF 1	8-016

REF-2

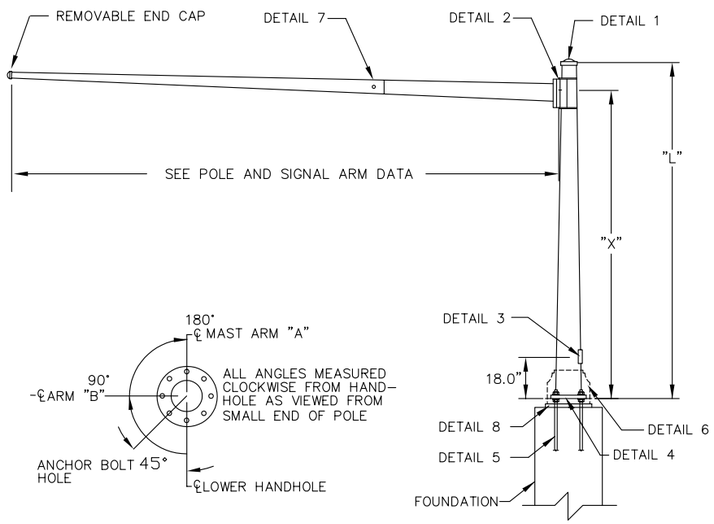

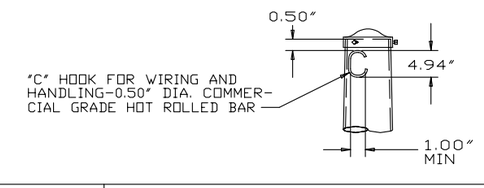

DETAIL 1 | POLE TOP

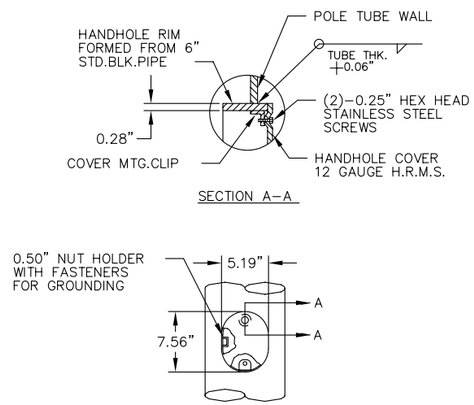

DETAIL 3 | HANDHOLE/CA049

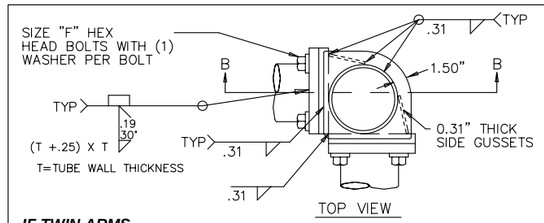

IF TWIN ARMS

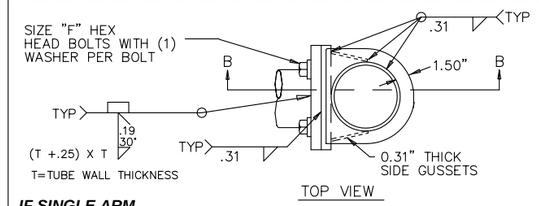

IF SINGLE ARM

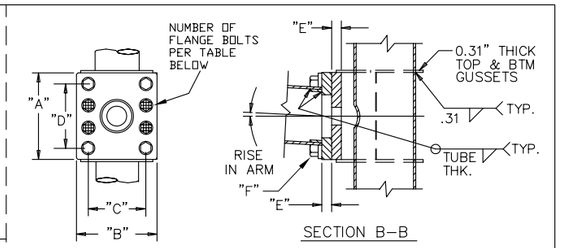

POLE BASE DIA.	NUM OF BOLTS	"A"	"B"	"C"	"D"	"E"	"F" (DIA. X LGTH.)
18.00"	**8**	24.25"	24.25"	20.50"	20.50"	2.00"	1.50" X 4.25"
14.00"	**4**	19.75"	19.75"	16.00"	16.00"	1.75"	1.50" X 3.75"

DETAIL 2 | SIGNAL ARM ATTACHMENT

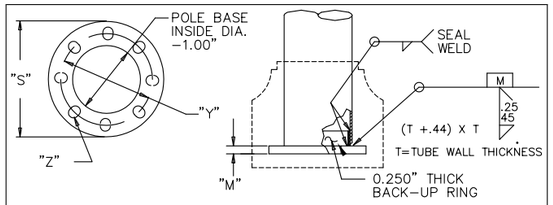

DETAIL 4 | 8 BOLT POLE BASE

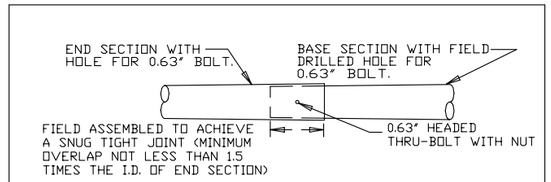

DETAIL 7 | SIGNAL ARM SLIP JOINT

MATERIAL DATA

COMPONENT	ASTM DESIGNATION	MIN. YIELD (KSI)
POLE SHAFT- 3,7,5,11 GA.	A595 GR.A	55
POLE SHAFT- ALL OTHERS	A572 GR.55	55
POLE BASE	A36	36
ARM SHAFT- 3,5,7 GA.	A595 GR.A	55
ARM SHAFT- ALL OTHERS.	A572 GR.55	55
ARM CONNECTION	A572 GR.50	50

COMPONENT	ASTM DESIGNATION	MIN. YIELD (KSI)
ARM CONN. BOLTS	A325	
GALVANIZING- POLE	A123	
GALVANIZING- HARDWARE	A153	
ANCHOR BOLTS	F1554 GR.55	55

FINISH NOTE:
POWDER COAT OVER GALVANIZED, SEMI-GLOSS BLACK

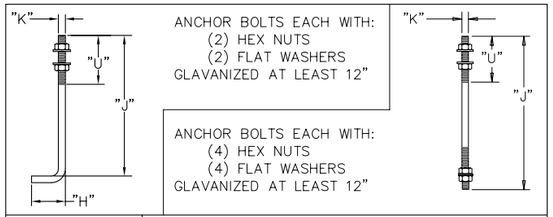

DETAIL 5 | "J" OR DOUBLE NUT ANCHOR BOLT

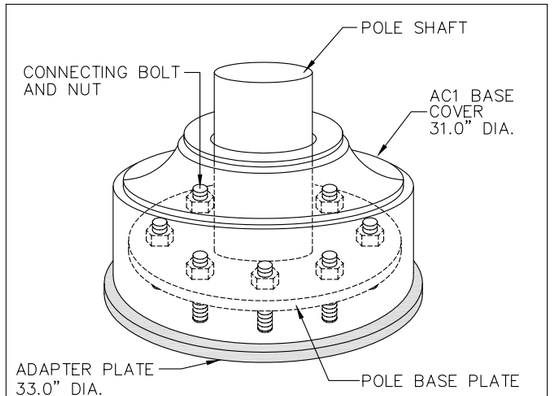

NOTE: ADAPTER PLATE TO BE POWDER COAT OVER GALVANIZED, SEMI-GLOSS BLACK

DETAIL 6 | CLASSIC AC1 BASE COVER

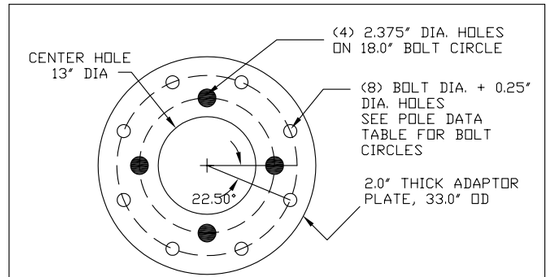

HARDWARE FOR ADAPTOR PLATE:
(4) 2.0" X 10.0" HEX HEAD CAP SCREW
(12) 2H NUTS
(8) F436 FLAT WASHERS

THESE ITEMS TO BE PROVIDED IN A BURLAP BAG AND PLACED INSIDE THE POLE

DETAIL 8 | ROUND ADAPTOR PLATE

SHAFT ID	SHAFT DATA				BASE PLATE				TRAFFIC ARM DATA								ANCHOR BOLT		
	BASE DIA. (IN)	TOP DIA. (IN)	LGTH. "L" (FT)	WALL THICK (IN)	DIA. "S" (IN)	BOLT CIRCLE "Y" (IN)	THK. "M" (IN)	HOLE "Z" (IN)	ARM	FIXED END DIA. (IN)	FREE END DIA. (IN)	GAUGE OR THK (IN)	SEC. LGTH. (FT)	SPAN (FT)	RADIAL ORIENT (DEG)	ATTACH ELEV "X" (FT)	DIA. "K" (IN)	LGTH. & HOOK "J X H" (IN)	THREAD LENGTH "U" (IN)
11965-1-1	18.00	15.06	21.0	0.250	28.0	23.0	1.75	2.00	A	15.16	12.27	0.3125	20.69	66.0	180	19.0	1.75	84 X 6	9.0
										13.00	6.28	0.1793	48.00						
11965-1-2	14.00	11.06	21.0	0.188	28.0	23.0	1.50	1.75	A	12.00	6.96	0.1793	36.00	36.0	180	19.0	1.50	54 X 6	9.0
11965-1-3	18.00	15.06	21.0	0.313	28.0	23.0	1.75	2.00	A	15.86	12.27	0.3125	25.69	71.0	180	19.0	1.75	84 X 6	9.0
										13.00	6.28	0.1793	48.00						
11965-1-4	18.00	15.06	21.0	0.313	28.0	23.0	1.75	2.00	A	15.86	12.27	0.3125	25.69	71.0	180	19.0	1.75	84 X 6	9.0
										13.00	6.28	0.1793	48.00						

REV.	DATE	REVISION

ATS-SALES

CUSTOMER: CITY OF SUMMERVILLE

MAST ARM POLE DETAILS
US 17 A (MAIN ST.) &
AZALAE DR.
CITY OF SUMMERVILLE, SC

valmont POLES
Valley,NE 68064
(402) 359-2201

08/07/14

11965-1

REV. –

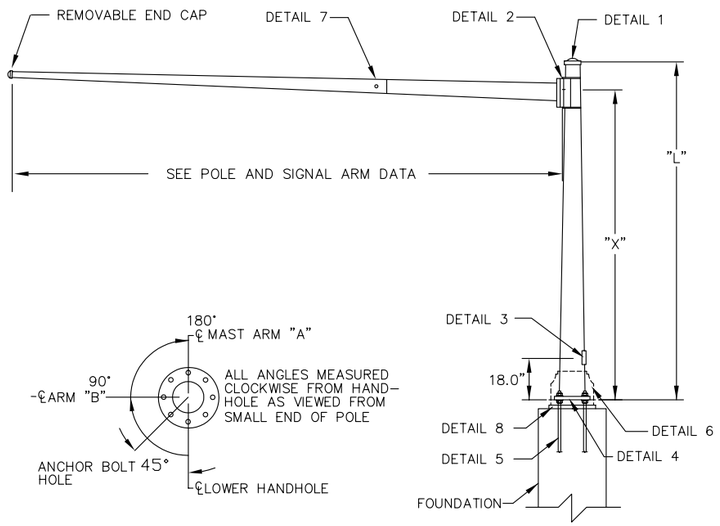

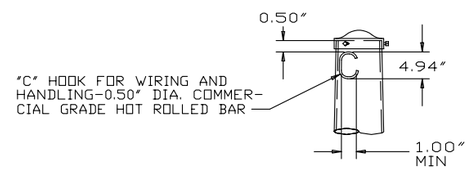

DETAIL 1 | POLE TOP

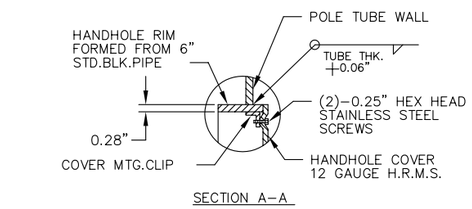

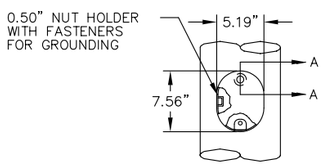

DETAIL 3 | HANDHOLE/CA049

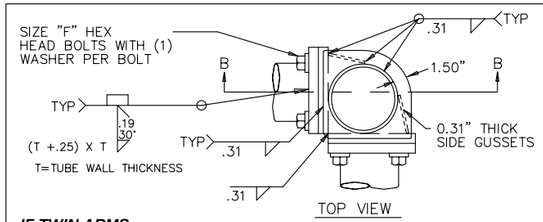

IF TWIN ARMS

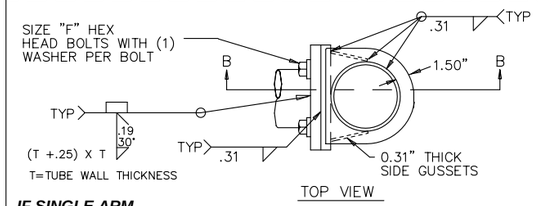

IF SINGLE ARM

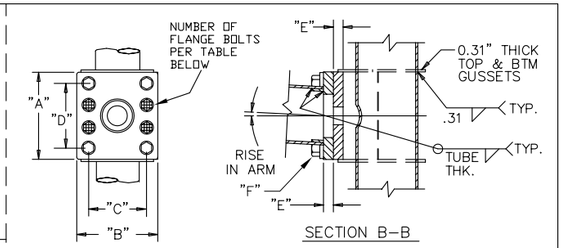

POLE BASE DIA.	NUM OF BOLTS	"A"	"B"	"C"	"D"	"E"	"F" (DIA. X LGTH.)
18.00"	**8**	24.25"	24.25"	20.50"	20.50"	2.00"	1.50" X 4.25"
16.00"	**8**	22.25"	22.25"	18.50"	18.50"	2.00"	1.50" X 4.25"

DETAIL 2 | SIGNAL ARM ATTACHMENT

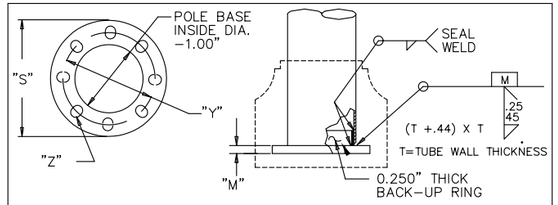

DETAIL 4 | 8 BOLT POLE BASE

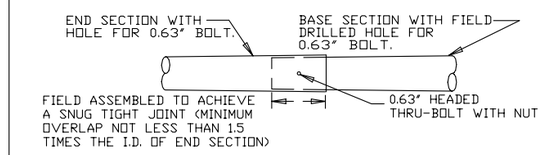

DETAIL 7 | SIGNAL ARM SLIP JOINT

MATERIAL DATA

COMPONENT	ASTM DESIGNATION	MIN. YIELD (KSI)
POLE SHAFT- 3,7,5,11 GA.	A595 GR.A	55
POLE SHAFT- ALL OTHERS	A572 GR.55	55
POLE BASE	A36	36
ARM SHAFT- 3,5,7 GA.	A595 GR.A	55
ARM SHAFT- ALL OTHERS.	A572 GR.55	55
ARM CONNECTION	A572 GR.50	50

COMPONENT	ASTM DESIGNATION	MIN. YIELD (KSI)
ARM CONN. BOLTS	A325	
GALVANIZING- POLE	A123	
GALVANIZING- HARDWARE	A153	
ANCHOR BOLTS	F1554 GR.55	55

FINISH NOTE:
POWDER COAT OVER GALVANIZED, SEMI-GLOSS BLACK

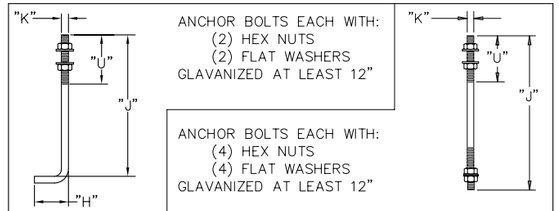

DETAIL 5 | "J" OR DOUBLE NUT ANCHOR BOLT

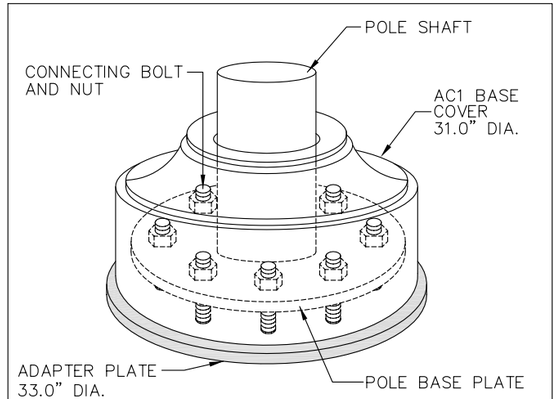

NOTE: ADAPTER PLATE TO BE POWDER COAT OVER GALVANIZED, SEMI-GLOSS BLACK

DETAIL 6 | CLASSIC AC1 BASE COVER

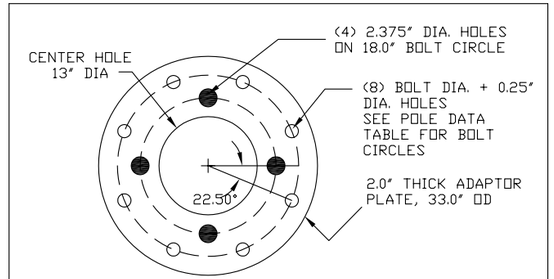

HARDWARE FOR ADAPTOR PLATE:
(4) 2.0" X 10.0" HEX HEAD CAP SCREW
(12) 2H NUTS
(8) F436 FLAT WASHERS

THESE ITEMS TO BE PROVIDED IN A BURLAP BAG AND PLACED INSIDE THE POLE

DETAIL 8 | ROUND ADAPTOR PLATE

SHAFT ID	SHAFT DATA				BASE PLATE				TRAFFIC ARM DATA								ANCHOR BOLT		
	BASE DIA. (IN)	TOP DIA. (IN)	LGTH. "L" (FT)	WALL THICK (IN)	DIA. "S" (IN)	BOLT CIRCLE "Y" (IN)	THK. "M" (IN)	HOLE "Z" (IN)	ARM	FIXED END DIA. (IN)	FREE END DIA. (IN)	GAUGE OR THK (IN)	SEC. LGTH. (FT)	SPAN (FT)	RADIAL ORIENT (DEG)	ATTACH ELEV "X" (FT)	DIA. "K" (IN)	LGTH. & HOOK "J X H" (IN)	THREAD LENGTH "U" (IN)
11965-2-1	18.00	15.06	21.0	0.375	30.0	24.0	2.00	2.25	A	16.28	11.72	0.3750	32.62	80.0	180	19.0	2.00	84 X 6	10.0
										12.50	5.50	0.2093	50.00						
11965-2-2	16.00	13.06	21.0	0.219	28.0	23.0	1.50	1.75	A	13.59	11.28	0.2500	16.52	54.0	180	19.0	1.50	54 X 6	9.0
										12.00	6.40	0.1793	40.00						
11965-2-3	18.00	15.06	21.0	0.313	28.0	23.0	1.75	2.00	A	16.28	12.27	0.3125	28.69	76.0	180	19.0	1.75	84 X 6	9.0
										13.00	6.00	0.1793	50.00						
11965-2-4	18.00	15.06	21.0	0.219	28.0	23.0	1.75	2.00	A	14.32	12.27	0.3125	14.69	62.0	180	19.0	1.75	84 X 6	9.0
										13.00	6.00	0.1793	50.00						

REV.	DATE	REVISION

CUSTOMER: CITY OF SUMMERVILLE

MAST ARM POLE DETAILS
US 17 A (MAIN ST.) &
RACKAWAY RD./HOLIDAY DR.
CITY OF SUMMERVILLE, SC

ATS-SALES

valmont POLES
Valley,NE 68064
(402) 359-2201

08/07/14

11965-2

REV. -